M SERIES

Installation, operation and maintenance instructions

for TECO low voltage motors

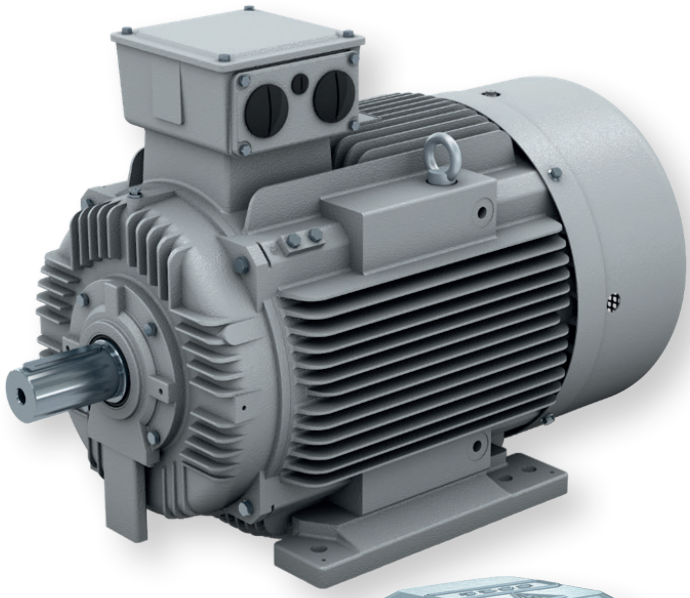

TECO

distributed by

MOTOVARIO®

HEART OF MOTION

a TECO Group company

CAST IRON AESV AESU
ALUMINUM AERV AEQV

Table of Contents

1. INTRODUCTION 4
1.1. General 4
1.2. Specific 4
1.2.1. Warranty 4
2. SAFETY INFORMATION 4
2.1. Introduction 4
2.1.1. Overview 4
2.1.2. Qualified Person 5
2.2. Transportation 5
2.2.1. Goods Receipt 5
2.2.2. Handling 5
2.3. Storage 5
2.3.1. Short term Storage 5
2.3.2. Long term Storage 5
2.4. Prior to installation 6
2.5. Installation 6
2.5.1. Overview 6
2.5.2. Rotating Parts 6
2.5.3. Alignment 6
2.5.4. Electrical 7
2.6. Operation 7
2.6.1. Do not touch 7
2.6.2. Space Heater 7
2.6.3. Ear Protection 7
2.6.4. Hot Surfaces 7
2.6.5. Cover energized and rotating parts 7
2.6.6. Re-greasing 8
2.7. Maintenance 8
3. CE DECLARATION OF CONFORMITY 8
4. TRANSPORT 9
4.1. Inspection on receipt 9
4.1.1. Visible Damage 9
4.1.2. Complete Shipment 9
4.1.3. Hidden Damage 9
4.1.4. Nameplate 9
5. STORAGE 9
5.1. Short term storage (> 24 months) 9
5.1.1. Condensation 9
5.1.2. Bearing oxidation 10
5.2. Long term storage (> 48 months) 10
5.2.1. Corrosion protection 10
5.2.2. Condensation prevention 10
5.2.3. Vibration protection 10
5.2.4. Bearing oxidation 10
6. PRIOR TO INSTALLATION 10

6.1. Application 10
6.1.1. Nameplate 10
6.1.2. Load Characteristics 10
6.1.3. Ambient Conditions 10
6.1.4. Mounting Arrangements 11
6.2. Special tasks after short term storage (> 24 months) 11
6.2.1. Changing bearings or replacing grease 11
6.3. Special tasks after long term storage (> 48 months) 11
6.3.1. Changing bearings 11
6.4. Measure Insulation Resistance 11
7. INSTALLATION 12
7.1. Mechanical 12
7.1.1. Standards 12
7.1.2. Cooling and ventilation 12
7.1.3. Degree of protection 12
7.1.4. Mounting Arrangements 13
7.1.5. Bearings 13
7.1.6. Balancing 13
7.1.7. Coupling Elements 14
7.1.8. Rotating Parts 14
7.1.9. Alignment 14
7.1.10. Noise emission 15
7.1.11. Optional accessories 15
7.2. Electrical connection 15
7.2.1. Frequency Converter (Inverter) Supply 15
7.2.2. Electromagnetic compatibility 15
7.2.3. Terminal box 15
7.2.3.1. General 15
7.2.3.2. Design 16
7.2.3.3. Cable glands 16
7.2.3.4. Terminal Block 16
7.2.3.5. Earthing 17
7.2.4. Connection 17
7.2.4.1. Terminal marking 17
7.2.4.2. Direction of rotation 18
7.2.4.3. Terminal board connections 18
7.2.4.4. Connecting the temperature sensor (thermistors) 18
7.2.4.5. Connecting of accessories 18
8. FINAL CHECK 18
8.1. Measures before start-up 18
9. OPERATION 19
10. MAINTENANCE 20
10.1. Visual inspection 20
10.2. Lubrication 20
11. REPAIR 23
12. DISPOSAL 23
13. SPARE PARTS 23

TECO distributed by MOTOVARIO HEART OF MOTION a TECO Group company

1 Introduction

1.1 General

This instruction manual is for TECHNICAL USE ONLY, NOT FOR COMMERCIAL PURPOSES. The warranty is limited to coverage expressed in your sales contract.

This description relates to the delivered equipment and explains the best practice in equipment handling, from first delivery to final disposal. Before you handle, read these operating instructions carefully to become familiar with the design and operation. This insures safe and reliable equipment function and long service life.
Consider and follow the essential safety instructions as well as the installation, maintenance and operation notices in these instructions (IOM).

For practical reasons, it is not possible to include detailed information in this IOM that covers all constructive variables, all possible assembly and operation or maintenance alternatives. For this reason, the present IOM only includes required information that allows qualified and trained personnel to carry out the work.

1.2 Specific

This manual covers TECO LV-motors type AESV, AESU, AERV and AEQV.

1.2.1 Warranty

TECO warrants its products against defects in workmanship as long as the instructions in this Manual are followed with additionally proof of the periodical maintenance by transfer of written documentation to TECO each time the maintenance work is carried out.
During the warranty period, repair and/or replacement should only be carried out by personnel of TECO authorized repair shops.

2 Safety information

2.1 Introduction

Warning Triangle indicates dangerous situations which can seriously affect personal injury if proper precautions are not taken.

A grey text box indicates very important statements, instructions and procedures which must be adhered too.

2.1.1 Overview

Electric rotating machinery and electricity can cause serious or fatal injury if the motor is improperly installed, operated or maintained. Responsible personnel must be qualified and fully trained to understand the hazards to themselves and others before being involved in installation, start up, operation or maintenance of electric motors.

A motor is not subject to the European Machinery Directive. After appropriate installation and/or assembly in an overall system it becomes a component of the machine or plant under construction, which must comply with the relevant standards and directives. The manufacturer of the machine has the sole responsibility to comply with these standards.
This documentation would become too large if it contained all the detailed information relative to possible construction variants, and it cannot take into account every conceivable case involving installation, start up, operation or maintenance. Therefore it only contains the necessary instructions for qualified personnel operating motors in an industrial environment.
Where it is intended to use the machine in non-industrial environments additional requirements have to be met. These conditions must be assessed by the manufacturer of the machine by introducing additional safety measures for the machine.

2.1.2 Qualified Person

Qualified Person is somebody who, by reason of training, experience, instruction and knowledge of the relevant standards, regulations, accident prevention rules and working conditions, is authorized to perform the appropriate activities required, and thereby is able to recognise and prevent potentially dangerous situations (For the definition of skilled workers see VDE 0105 or IEC 364, which also regulates the prohibition of the employment of unqualified persons). Knowledge of first aid and the local rescue organisation must also be included.

2.2 Transportation

2.2.1 Goods Receipt

Inspect the condition of the packaging immediately upon receipt. When any damage is noticed, this must be reported in writing to the shipping company. In case of any hidden damage (not visible before unpacking) this must be reported immediately to your insurance company and to TECO. In this case, no installation must be started before the problem has been solved.

2.2.2 Handling

Handle the motor carefully in order to prevent impact and damage to the bearings. Always ensure the shaft locking device (when fitted) is used during transportation.

Use only the eyebolts to lift the motor. The eyebolts are designed for the motor weight only. Never use the eyebolts to lift the motor with additional loads. When more than one lifting eyebolt is provided on the motor, all must be used together (i.e. by attaching a supporting chain) to share the load. Ensure that the eyebolts are fully tightened before lifting.

2.1.1 Overview

Electric rotating machinery and electricity can cause serious or fatal injury if the motor is improperly installed, operated or maintained. Responsible personnel must be qualified and fully trained to understand the hazards to themselves and others before being involved in installation, start up, operation or maintenance of electric motors.

2.3 Storage

2.3.1 Short term Storage

The Motor must be stored in a clean, dry and dust free environment without vibration, gases and corrosive agents. The relative humidity must not exceed 80%.
To prevent water condensation within the motor it is advised to keep the space heater energized (if fitted).
To prevent bearing oxidation, and to ensure an even distribution of the lubricant, the motor shaft must be turned once a month (at least six turns), always finishing in a different position.

2.3.2 Long term Storage

If the motors are stored for more than two years, we recommend replacing the bearings before the motor is used and to ensure the insulation resistance is greater than 1MΩ before energizing.

2.4 Prior to Installation

- Read the Safety Instructions in full
- Ensure nameplate data corresponds with your requirements
- Ensure the motor is undamaged
- Remove any shaft locking device
- Slowly rotate the shaft to ensure free movement
- Ensure the mounting, shaft orientation, design and drain hole positions are correct for the application

2.5 Installation

2.5.1 Overview

The ventilating air flow to and from the motor must not be obstructed. The minimum clearance between cooling air inlet and any obstructions is 30% of the diameter of the air inlet of the fan cover.

When coupling elements are being fitted to the shaft, percussion blows must be avoided since they could cause bearing damage. Before fitting the coupling the shaft end should be lightly lubricated to improve mounting.
A flexible coupling is preferred in order to reduce any shock loads being transmitted to the motor shaft and bearing from the driven machine.

Motors are assembled for the mounting arrangement ordered. Consult MOTOVARIO to clarify whether a motor may be safely used in different orientations.

When mounting the motor ensure this is done with securely tightened and high tensile strength steel fixings in each fixing hole.

To ensure the degree of protection unused cable entry holes in the terminal box must be properly closed with blanking plugs having a minimum degree of protection equal to that indicated on the motor nameplate.

2.5.2 Rotating Parts

All shaft keys on rotating parts must be fully retained before the motor is started.

TECO motors are dynamically balanced with "half keys" according to IEC standard therefore all shaft fitments (i.e. pulleys, couplings, etc.) must be balanced according to the same standard.

2.5.3 Alignment

Ensure the motor and driven shafts are accurately aligned considering the coupling manufacturers instructions. Mounting bolts must be carefully tightened to avoid alignment changes. Recheck the alignment to ensure it is correct after the bolts are fully tightened.

Radial loads such as a belt or chain drive must not exceed the limit values. Consult MOTOVARIO if in doubt.

2.5.4 Electrical

Follow the basic rules for servicing electro-mechanical equipment!
- ► Disconnect the system and disconnect the auxiliary circuits, for example anti-condensation heaters
- ► Prevent reconnection
- ► Make sure that all rotating parts are stationary
- ► Make sure that the equipment is at zero voltage
- ► Earthing and short-circuiting
- ► Cover or isolate nearby components that are still live.
- ► To energize the system, apply the measures in reverse order.

The motor must be earthed according to relevant IEC standards

Refer to the nameplate voltage, frequency and connection diagram to ensure the motor is correctly configured (i.e. star/ delta links) for the power supply to which it will be connected

To ensure the degree of protection cable glands in the terminal box must have a minimum degree of protection equal to that indicated on the motor nameplate

Consider tightening torques for the terminal board and accessory terminals to avoid damage

Thermistors must not be connected to any voltages above 2,5V DC to avoid damage to the Thermistors and Motor Winding

Check the motor direction of rotation by energizing it before it is coupled to avoid damaging the driven machine.
Ensure that all covers (i.e. terminal box lid) are refitted before energizing

2.6 Operation

2.6.1 Do not touch

Do not touch non-insulated energized parts during operation and never touch or stay too close to rotating parts

2.6.2 Space Heater

Ensure that the space heater (when fitted) is always de-energized during operation

2.6.3 Ear Protection

Suitable ear protection must be worn near machinery in operation to reduce the noise reaching the ear to a safe level.

2.6.4 Hot Surfaces

To avoid serious burns do not touch motor surface during operation. The standard operating temperature can reach more than 100°C. Be careful after de-energizing the motor as its surface will remain hot for a long time!

2.6.5 Cover energized and rotating parts

If any work is to be carried out with the motor running ensure that energized and rotating parts are safely guarded.

2.6.6 Re-greasing

When motors are equipped with grease nipples the bearings shall be re-greased first time within the first hour of operation and thereafter at regular regreasing intervals. In case of regreasing ensure the correct type and amount of grease is used.

2.7 Maintenance

Inspect the motor at regular intervals. Ensure cooling circulation is unblocked and there is no abnormal vibration and noise. Check fixings and fasteners have not become loose nor corroded. Check electrical and earth connections are tight and not corroded. Inspect seals and gaskets to ensure they are in position and not worn. Contact Motovario if the seal/gasket types on the motor are unknown. Ensure that the inside of motor and terminal box is dry.

Before any service is performed follow the installation rules according to point 5.

Unauthorized dismantling of the motor during the warranty period may invalidate the warranty. Consult MOTOVARIO if in doubt.

3 CE Declaration of Conformity

TECO

TECO Electric & Machinery Co., Ltd.

No.9, Changjiang South Road New District Wuxi City , Jiangsu Province , PRC TEL:+86-510-85343205 FAX:+86-510-85343054 Page 1 of 1

EU DECLARATION OF CONFORMITY

We, WUXI TECO ELECTRIC & MACHINERY CO., LTD
No.9, Changjiang S. Rd Wuxi City ,Jiangsu Province , PRC

Declare that under our sole responsibility for supplying/manufacturing of Squirrelcage induction motors :

AESV - AESU

to which this declaration relates, are in conformity with the following European Union Directives and standards identified in this declaration, if the motors are operated according to our "Operation & Maintenance Manual".

EU Directives
Low Voltage Directive 2014/35/EU
Electromagnetic Compatibility Directive 2014/30/EU
Restriction of the use of certain hazardoussubstances Directive 2011/65/EU
EcodesignDirective 2009/125/ECand its relative Electric motorsRegulation (EC) No 640/2009 amended byRegulation (EU) No 4/2014

Standards
EN 60034-1, EN 60034-5, EN 60034-6, EN 60034-7, EN 60034-8, EN 60034-9, EN 60034-11, EN 60034-12, EN 60034-14, EN61000-6-4, EN 50581,EN 60034-2-1andEN 60034-30-1.

Signature: FAIR YANG
Printed Name: FAIR YANG
Position: Deputy Director
Design Division / Wuxi Design Center
Date: 24th December 2018

DOC. TTR-PAAZ-001
REV.01

TECO

TECO Electric & Machinery Co., Ltd.

10F, No.3-1,Yuan Cyu St., Nan-Kang, Taipei 115, Taiwan TEL:886-2-6615-9111 FAX:886-2-6615-2253

EU DECLARATION OF CONFORMITY

We, TECO ELECTRIC & MACHINERY CO., LTD.
10F, No.3-1,Yuan Cyu St., Nan-Kang,
Taipei 115, Taiwan

Declare under our sole responsibility that the aluminum frame 3-phase squirrel cage induction motors :

AERV、AEQV

to which this declaration relates, are in conformity with the following European Union Directives and standards identified in this declaration, if the motors are operated according to our "Operation & Maintenance Manual".

EU Directives
Low Voltage Directive 2014/35/EU
Electromagnetic Compatibility Directive 2014/30/EU
Restriction of the use of certain hazardous substances Directive 2011/65/EU
Ecodesign Directive 2009/125/EC and its relative Electric motors Regulation (EC) No 640/2009 amended by Regulation (EU) No 4/2014

Standards
EN 60034-1, EN 60034-5, EN 60034-6, EN 60034-7, EN 60034-8, EN 60034-9, EN 60034-11, EN 60034-12, EN 60034-14, EN 61000-6-4, EN 50581, EN 60034-2-1 and EN 60034-30-1.

LianShin Hung
Deputy Director
GE R&D Center
31 July，2018

DOC. 1BW0-A1-C-LD-384
REV.01

4 Transport

Use lifting eyes only!
Using all the lifting eyes is obligatory when transporting and lifting the motor. Make sure that the lifting eyes are in the correct position and the required numbers for the mounting type are used. Screwed lifting eyes must be tightly fastened and must be screwed in right up to their supporting surface. Use suitably-sized lifting equipment such as

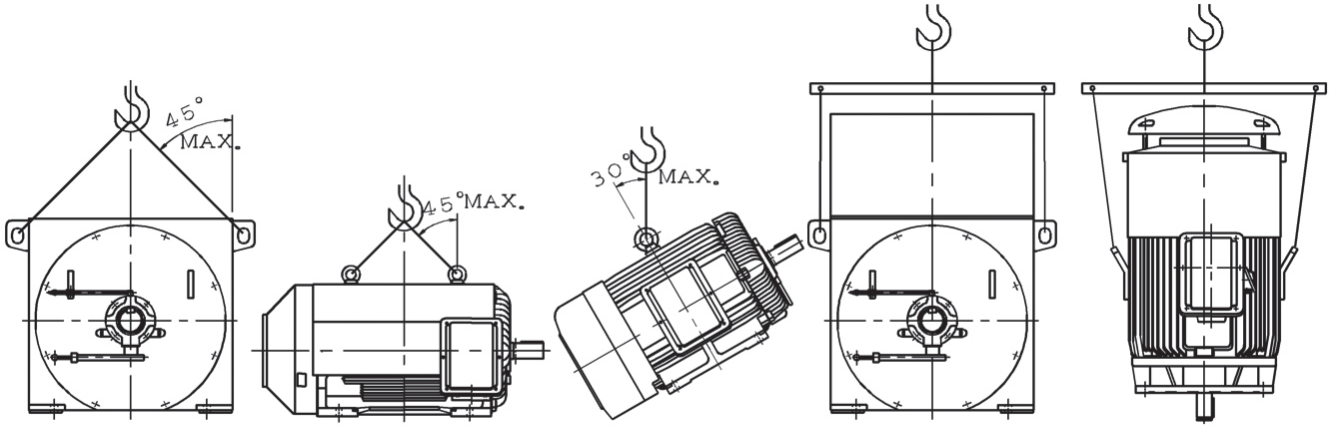

Failure to follow these rules could result in the equipment falling over or slipping in the lifting tackle. The result could be death, serious damage, or material breakage.

Remove or unfasten any transport locks (painted yellow) before start-up and store them for later use.

4.1 Inspection on Receipt

4.1.1 Visible Damage

Check if packing and/or goods are damaged immediately on receipt

4.1.2 Complete Shipment

Check if delivery of the order is complete (Spare Parts, Documents…)

4.1.3 Hidden Damage

TECO recommends unpacking and inspecting the goods for hidden damage before storage

4.1.4 Nameplate

Check the nameplate data corresponds with the application for which you intend to use the equipment

5 Storage

The Motor must be stored in a clean, dry and dust free indoor environment (to prevent temperature variations causing condensation) without vibration, gases and corrosive agents. The relative humidity must not exceed 80%.

5.1 Short Term Storage (> 24 months)

5.1.1 Condensation

To prevent water condensation within the motor it is advised to keep the space heater (if fitted) energized

TECO distributed by MOTOVARIO HEART OF MOTION a TECO Group company

5.1.2 Bearing oxidation

To prevent bearing oxidation, and to ensure an even distribution of the lubricant, the motor shaft must be turned once a month (at least six turns), always finishing in a different position.

5.2 Long Term Storage (> 48 months)

5.2.1 Corrosion protection

All bare metal parts must be protected with a layer of oil, grease or other easily removable anticorrosion coating

5.2.2 Condensation prevention

To prevent water condensation within the motor it is advised to keep the space heater (if fitted) energized. If no space heater fitted the motor has to be wrapped with an air tight bag including sufficient amount of desiccant keeping the enclosed volume dry.

5.2.3 Vibration protection

Keep shaft locks fitted where supplied

5.2.4 Bearing oxidation

To prevent bearing oxidation, and to ensure an even distribution of the lubricant, the motor shaft must be turned once a month (at least six turns), always finishing in a different position. Where fitted refit shaft lock after this procedure.

6 Prior to Installation

Ensure all covers are installed before starting commissioning. Failure to follow this can endanger your life.
Some covers are there to ensure correct air flow and necessary for effective cooling

6.1 Application

6.1.1 Nameplate

The rating plate shows the identification data, the most important technical data and defines the limits of proper usage. Ensure the name plate values (i.e. current, voltage, frequency, speed, power…) comply with the application.

6.1.2 Load Characteristics

Ensure the motor is correctly rated for the starting and operating conditions of the driven machine.

6.1.3 Ambient Conditions

TEFC "Totally enclosed fan cooled" motors are equipment suitable to operate in areas with moisture, dirt and corrosive materials. Refer to EN 60034: Part 5 for more detailed information on suitability of a particular enclosure rating.
In general the equipment is designed for operation up to an altitude of 1000m above sea level and for an ambient temperature ranging from -20ºC to +40ºC. Any exception will be stated on the nameplate.
Considering that direct sun exposure and sand or dust penetration can cause temperature to increase beyond safe limits externally installed motors should always be additionally protected against weathering.
Cable entries and blanking plugs must be fitted and match the IP rating of the motor.

6.1.4 Mounting Arrangements

Check that the orientation of the frame is appropriate for the mounting design of the motor.
For instance, motors designed for B3 (horizontal shaft), may not be suitable without modification for V5 (vertical shaft) because any drain holes will be in the wrong position, additional fixings may be required to prevent bearing damage and different bearings may be needed to withstand the thrust force.
For vertically mounted motors with air inlet on top, customer has to avoid foreign parts falling into the air inlet.
Consult MOTOVARIO to establish whether a motor may be safely used in an orientation different from that ordered.

6.2 Special tasks after short term storage (> 24 months)

6.2.1 Changing bearings or replacing grease

After exceeding the short term storage limit the motor is out of warranty. TECO recommends replacing bearings on motors with greased for life bearings.

After exceeding the short term storage limit the motor is out of warranty. TECO recommends totally renewing the grease on re-greasable motor bearings.

Replace bearings with identical ones to the bearing types fitted.

6.3 Special tasks after long term storage (> 48 months)

6.3.1 Changing bearings

After exceeding the long term storage limit the motor is out of warranty. TECO recommends replacing bearings on all motors.
Replace bearings with identical ones to the bearing types fitted.

6.4 Measure Insulation Resistance

Checking the insulation resistance is mandatory after new installation prior to start-up and after long periods of storage or non operation.

To measure the insulation resistance

- Remove all power-cables, auxiliaries (i.e. brake rectifier…) and terminal links that are connected to the terminals before measuring the insulation resistance.
- Use a high quality insulation resistance meter.
- Wait for at least 1 min until the final resistance value is reached.

The following table indicates the measuring circuit voltage and the limit values for the minimum and the critical insulation resistance of the windings at 25°C.

Rated voltage U rated	**<2.00 kV**
Measuring circuit voltage	**DC 500 V**
Minimum insulation resistance $R_{(insulation)}$ for new, cleaned or repaired winding (degrades during lifetime down to the critical value $R_{(crit)}$)	**100 MΩ**
Resistance constant value $R_{(const)}$ for calculation of Minimum insulation resistance $R_{(at\ 25°C)}$ after a long operating time	**1 MΩ/kV**

Note:
- New and dry windings have a usual insulation resistance R(at 25°C) >>100 MΩ.
- The insulation resistance R(insulation) during operation is usually much lower and depends on the winding age, rated voltage and ambient conditions like winding temperature, moisture and / or dirt penetration. If those individual circumstances cause a measured insulation resistance R(at 25°C) below the minimum value R(crit). The winding has to be cleaned and dried.

The critical insulation resistance value for a winding (ambient) temperature of 25 °C can be calculated as explained in the example.

Example: Critical resistance $R_{(crit)}$ for rated voltage U_N = 400 V (= 0.4 kV)

$UN \times R_{(const)} = R_{(crit)} = 0.4\ kV \times 1\ M\Omega/kV =$ **0.4 MΩ**

$R_{(crit)}$ = critical resistance for rated voltage [MΩ]
U_N = rated voltage [kV]
$R_{(const)}$ = 1 [MΩ/kV]

If the winding temperature is not 25°C the critical resistance value should be corrected by using the following formula:

$R_{(crit\ at\ 25°C)} = [(K+25) / (K+Ta)] \times R_{(Ta)}$

$R_{(crit\ at\ 25°C)}$ = insulation resistance related to 25°C ambient temperature [MΩ]
K = constant value 234.5 for copper
T_a = ambient temperature where the resistance was measured [°C]
$R_{(Ta)}$ = resistance value measured at ambient temperature [MΩ]

If the critical insulation resistance value measured is less than or equal to the calculated value R(crit at 25°C) the windings must be cleaned thoroughly and dried.

If the critical insulation resistance value measured is close to the calculated value R(crit at 25°C) you must monitor the insulation resistance at frequent intervals.

7 Installation

7.1 Mechanical

7.1.1 Standards

According to valid CE-certificate refer to point 3

7.1.2 Cooling and ventilation

TECO motors are three-phase asynchronous motors with a totally enclosed internal cooling circuit and an external surface cooling circuit (TEFC) in accordance to IEC / EN 60034-6 cooling type IC 411. The fan is located at the NDE of the motor, fitted to the shaft and a fan cowl guides the external air to the cooling fins of the motor surface. The fan is designed for bidirectional use.

The recommended installation distance between air inlet of motor and obstruction should be at least ¼ of the air inlet diameter. A person should have enough room to carry out cleaning services. On motors cooled with ambient air, cowls must be cleaned at regular intervals to ensure free air circulation.

7.1.3 Degree of protection

To maintain the degree of protection of the motor unused holes and cable glands in the terminal box must be properly sealed.
Cable glands and blanking plugs with an equal or higher degree of protection as indicated on the nameplate must be used.

7.1.4 Mounting Arrangements

Ensure the orientation of the frame is appropriate for the design of the motor. For instance, motors designed for B3 (horizontal shaft), may not be suitable without modification for V5 (vertical shaft) because any drain holes will be in the wrong position, additional fixings may be required to prevent the shaft sliding through the bearings and different bearings may be needed to withstand the thrust force.

Consult MOTOVARIO to establish whether a motor may be safely used in an orientation different from that ordered.

Where the motor is to be subject to a high degree of vibration (such as on a vibrating screen), high humidity (typically above 95%), abnormal ambient temperature (typical beyond range -20 to +40°C), or high altitude (typically 1000 meter above sea level) ensure that the motor specification is appropriate.

When mounting the motor, ensure this is done securely using high tensile steel fixings fully tightened in each of the fixing holes provided.

The customer is fully responsible for the foundation. The foundation must be firm and sufficiently strong to support load. Foundations must be designed in a way to avoid any vibration.

7.1.5 Bearings

For frame size 280 and above TECO recommends using insulated bearing on NDE when the motor is supplied by a Frequency Converter (Inverter)

As standard the drive end (DE) bearing is axially fixed.
The fixed bearing absorbs axial and radial forces transmitted from the driven machine. The floating bearing is installed in the non drive end (NDE) to allow thermal expansion of the shaft and to absorb radial forces.
The calculated operating life L10 of the bearings is at least 20,000 hours when radial and axial forces are below the limits stated in the catalogue
TECO recommends avoiding fixed couplings in operation. The use of self-aligning or flexible couplings is recommended.
Sealed for life bearings are maintenance-free.

Re-greaseable bearings must be re-greased according to the appendix-1.

7.1.6 Balancing

TECO motors are dynamically balanced with a half key. The balance quality meets DIN ISO 1940 min. Q2.5 requirements.
The shaft end faces are marked in accordance with DIN ISO 8821
H = half key
F = full key
N= no key
The mechanical vibrations of the motors meet level N according to EN 60 034-14

Vibration Level with free Suspension acc. to EN 60 034-14			
Vibration vrms [mm/s]	**Frame Size 56 - 112**	**Frame Size 132 - 200**	**Frame Size 225 - 315**
Level N	2,2	2,8	3,5

Operating the motor above the rated speed by using a Frequency Converter (Inverter), the mechanical speed limits (according IEC / EN 60034-1) must be observed carefully

7.1.7 Coupling Elements

TECO recommends pulling shaft fitments onto the shaft by using the threaded centre hole in the shaft faces. TECO recommends the shaft fitments being heated before mounting

When coupling elements are being fitted to the shaft, percussion blows must be avoided since they could cause bearing damage. Before fitting the coupling the shaft end should be lightly lubricated to improve mounting.

TECO recommends avoiding fixed couplings for operation. The use of self-aligning or flexible couplings is recommended.

Couplings must be dynamically balanced with a half key. The balance quality has to meet DIN ISO 1940 min. Q2.5 requirements.

Ensure the motor and driven shafts are accurately aligned. Mounting bolts must be carefully tightened to avoid alignment changes and the alignment must be rechecked to ensure it is correct after the bolts are fully tightened.

7.1.8 Rotating Parts

All shaft fitments and safety guards must be fully retained before the motor is started.

7.1.9 Alignment

Motors must always be accurately aligned; this applies especially where motors are directly coupled.
Incorrect alignment can lead to bearing failure, vibration and shaft fracture.

Shaft centreline height growth calculation for TECO motors:
Δh [mm] = $(t_{hot} - t_{cold})$ x 0.00001 x Frame size [mm]

The motor shaft and the driven shaft should be aligned within the following tolerances in both angular and circular alignment:

TIR	Range of rotating speed	Solid coupling	Flexible coupling
C	2500 rpm and above	0.03 mm	0.03 mm
	Below 2500 rpm	0.04 mm	0.05 mm
A	2500 rpm and above	0.03 mm	0.03 mm
	Below 2500 rpm	0.03 mm	0.04 mm

TIR: Total indicated reading
C: Circular
A: Angular

Angular misalignment is the amount by which the centrelines of motor and driven shafts are skewed.
Angular misalignment can be measured using a dial indicator set up as shown in Fig. 7.

The couplings are rotated together through 360 degrees and adjusted so that the indicator does not measure run out of the coupling hub face.

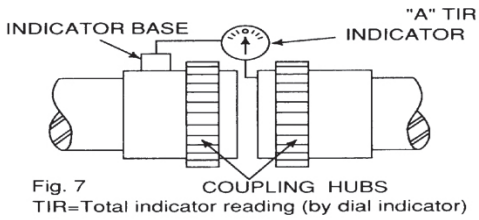

Fig. 7
TIR=Total indicator reading (by dial indicator)

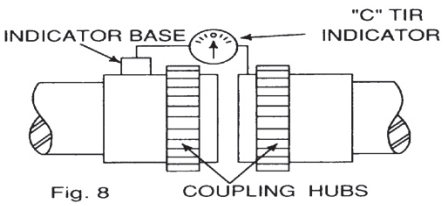

Fig. 8

Circular misalignment is the amount by which the centrelines of the driver and driven shafts are out of parallel. It can be measured using a dial indicator set up as shown in Fig. 8. Again, the couplings are rotated together through 360 degrees and adjusted so that the indicator does not measure run out of the coupling hub outside diameter.

7.1.10 Noise emission

Electrical machinery can generate harmful noise. Refer to 2.6.3 for ear protection.

Ensure the sound level of equipment (combination of motor and driven machine) is below the limits specified for the environment. If necessary additional provisions for noise reduction may be possible.
Consult MOTOVARIO for an offer.

7.1.11 Optional accessories

The motor may be equipped with electrical accessories (i.e. PT100, forced ventilation, space heater, encoder…) or mechanical accessories (i.e. insulated bearings, drain holes, cable glands…).

Check carefully what kinds of accessories are fitted by reading latest revision of order and order confirmation and by investigation of the equipment (i.e. additional nameplates, additional terminal box…).

Some accessories may require a specific IOM-manual to be followed. Consult MOTOVARIO in case of any doubt about possibly missing IOM-manual or description for accessories. Follow this motor IOM-manual for installation, operation and maintenance purposes of accessories if there is no specific one.

7.2 Electrical connection

7.2.1 Frequency Converter (Inverter) Supply

Operation by a VFD can cause current harmonics. The strength depends on converter type and design.
To stay within the limits of EN 61000-6-3 for the drive system (motor and converter) you must follow the installation, operation and maintenance instructions of the VFD manufacturer.

For frame size 280 and above TECO recommends using insulated bearing on NDE when supplied by a Frequency Converter (Inverter)

7.2.2 Electromagnetic compatibility

TECO motors achieve the requirements of EN 61000-6-2 when the power and signal cables are installed following the valid norms and regulations.

Unbalanced loads:

When torque levels are very unbalanced (pulsating) non-sinusoidal motor current will create harmonics. If this causes unacceptable disturbances on the power system extra measures have to be taken.

7.2.3 Terminal box

7.2.3.1. General

Refer to 2.5.4 of this manual
Supply cables shall be selected according to rated current, ambient conditions and specific installation (e.g. ambient temperature, wiring method etc.). Consider IEC/EN 60204-1 and/or DIN VDE 0100 and/or DIN VDE 0298 for supply cable design

7.2.3.2 Design

The terminal box is designed for supply cable access from different directions. The standard cable entry is from the right hand side when looking from the motor drive end shaft.

After removing the terminal box lid the four screws fixing the terminal box body can be removed and the terminal box body can be turned in four steps of 90°.

Please make sure that the motor internal wiring between winding and terminal board do not get neither damaged nor twisted.

Prior to reassembly the terminal box body and terminal box lid please insure all 'o'-rings and gaskets (between housing to terminal box body and terminal box body to terminal box lid) are properly seated.

7.2.3.3 Cable glands

As standard the cable entry holes are not equipped with cable glands! All cable entry holes are properly plugged with easy removable blanking plugs.

On customer request the motors may be equipped with cable glands. Please follow the specific IOM-manual for the cable gland used to insure proper and safe wiring.

Insure the cable glands used are rated to an equal or better protection class than the motor.

Take care that the outer cable insulation is not damaged, the wire ends for connection are properly stripped, the wires have sufficient length, the wire insulation is not damaged and earthing and screen (if any) is connected accordingly.

7.2.3.4 Terminal Block

All motors are equipped with metric threaded terminal blocks with six studs and all necessary nuts, washers and jumpers to make the electrical connection (Y or Δ). The wire ends must be equipped with cable lugs suitable for fitting to the stud thread size. For mounting the cable lugs by solder or crimping use applicable tools and follow the recommendations of cable lug supplier.

The material of the terminal block base is an insulating plastic which can be easily damaged by over tightening the fixings!

Stay below the maximum tightening torques for the individual threat sizes to avoid damage but insure to be above minimum tightening torque to ensure proper fastening of supply wires.

Table: Fastening torques for terminal board studs:

		Metric Thread Size							
Fastening Torque		M 3,5	M 4	M 5	M 6	M 8	M 10	M 12	M 16
[Nm]	min.	0,8	0,8	1,8	2,7	5,5	9	14	27
	max.	1,2	1,2	2,5	4	8	13	20	40

7.2.3.5 Earthing

Earthing the equipment is an essential safety measure and must be accomplished according to the local rules and regulations.
In some special cases (i.e. 500V) an unearthed main power supply may be used. In those cases special safety devices are mandatory to protect human life.

Make sure that you have detailed knowledge about the power supply configuration and the applicable rules, norms and regulations for earthing of the individual application to protect human life.

The motors are equipped with two earthing points, one inside the terminal box and one on the motor frame close to terminal box. Both are indicated with the earthing sign according to DIN EN 60 617-2 ⏚

The earthing wire diameter must meet EN 60034-1

For connecting the earthing wire make sure that

- the contact surface is unpainted, free of rust and protected against corrosion by using a suitable oil or grease (e.g. acid-free Vaseline)
- the cable lug or cable wire is fitted below the u-clamp or bracket
- the spring washer is located below the bolt head
- the tightening torque of the screws is within the values of the table in 7.2.3.4.

7.2.4 Connection

7.2.4.1 Terminal marking

The power terminals are marked with U1, V1, W1 and U2, V2, W2. The accessory terminals are usually marked with:

T1, T2…T∞	for Thermistor
H1, H2…H∞	for Heaters
TD1, TD2…TD∞	for Winding RTD's
BD1, BD2…BD∞	for Bearing RTD's
P1, P2…P∞	for Thermostats
BC1, BC2…BC∞	for Thermocouples

Connections for some accessories (if any) may be located in separate terminal boxes

Table:
Typical power and thermistor connection diagram for standard motors

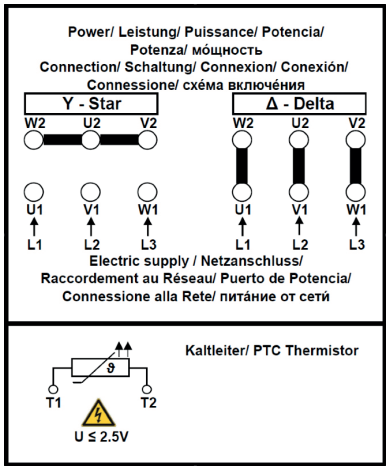

TECO distributed by MOTOVARIO HEART OF MOTION a TECO Group company

7.2.4.2 Direction of rotation

All motors of standard design are for use in both directions of rotation. The standard connection as shown in connection diagram at 7.2.4.1 is for "clock wise" rotation when viewed from the drive end shaft.
For "anti clockwise" rotation the line wires L1 and L2 should be interchanged.

7.2.4.3 Terminal board connections

Refer to 7.2.4.3 for standard connection with cable lugs.

When any special connection method is used refer to MOTOVARIO to confirm acceptance.

In case of flying leads the full responsibility for connection is the customer's. Follow the local rules, norms and regulations for cable extensions and ensure a proper strain relieve and to stay below the winding limit temperature (insulation class F limit temperature 155°C) to avoid any winding damage.

7.2.4.4 Connecting the temperature sensor (thermistors)

For connection of the thermistor refer to connection diagram shown in 7.2.4.1 by using the terminals supplied.

Thermistors must not be connected to any voltages above 2,5V DC to avoid damage to the thermistors and motor winding.

Use end sleeves fixed with a tool appropriate for the wire size.

Make sure that the wiring of accessories is not in contact with the terminal studs or other metallic parts of the power connections and/or frame to avoid abrasion caused by vibration during operation.

7.2.4.5 Connecting of accessories

For connection of any accessories refer to connection diagram applicable and using the terminals supplied and refer to 7.1.11 for more information.

Use end sleeves fixed with a tool appropriate for the wire size.

Make sure that the wiring of accessories is not in contact with the terminal studs or other metallic parts of the power connections and/or frame to avoid abrasion caused by vibration during operation.

8 Final Check

8.1 Measures before start-up

Make sure that the equipment

- data specified on the rating plate matches the operating conditions
- is assembled and aligned correctly
- screws and electrical connections are fastened according to the torques specified
- earthing connections are wired and fastened according to the torques specified
- is connected for the direction of rotation specified
- rotor and driven machine can turn free without mechanical grinding (clearance values match limits)
- contact protection devices for turning or energised parts are fitted
- key is removed or properly fixed if nothing is mounted on the motor shaft

- lifting eyes are properly tightened to avoid loosening by vibration
- cooling air flow is clear and not obstructed
- bearings are properly lubricated
- resistance values are above the limits
- monitoring equipment (if any) is connected correct and ready for operation
- cannot exceed the speed limit specified (use speed control and/or monitoring device in case)
- input and output signals (if any) have the correct settings
- accessories (i.e. brake, forced ventilation) are in effective operation

Make sure that the coupling
- is assembled and aligned correctly and has proper axial clearance

With a directly-coupled load ensure the motor and load shafts are accurately aligned and use a flexible coupling between them. Mounting bolts must be carefully tightened to avoid alignment changes and the alignment must be double checked to ensure it is correct even after the bolts are fully tightened.

Make sure that the pulley or sprocket
- is assembled and aligned correctly

In the case of belt or chain drives ensure the radial force is below the limit for the shaft and bearing and cannot damage the motor. Consult MOTOVARIO if in doubt.

9 Operation

After equipment start it must accelerate continuously and smoothly to its nominal speed. If unusual noise, vibration or smells are detected the equipment must be switched off immediately and the whole drive system must be analysed to detect where the problems or malfunction originates from.

The drive system must not be restarted until the malfunction is identified and corrected!

Once equipment is started and operates at its nominal speed motor temperature increase should be monitored at least every 15 minutes until stable. Use thermistors in the motor windings (if equipped) for temperature measurement. If no thermistors are fitted use a suitable temperature meter for measuring the surface temperature at the hot spot of motor housing (usually at front top) as highlighted in the table below.
The maximum temperature measured with thermistors in motor winding must be below the limit values of the motor thermal class acc. to IEC 85 as listed below.

Thermal Class	Y	A	E	B	F	H
Ambient temp. in °C	40					
Limit value for temp. increase in K	45	60	75	80	105	125
Safe operating hot spot winding temp. in °C	**85**	**100**	**115**	**120**	**145**	**165**
Safety margin in K	5	5	5	10	10	15
Maximum hot spot winding temp. in °C	90	105	120	130	155	180
Approx. max. hot spot housing temp. in °C	70	85	100	110	135	160

To increase motor life the temperature increase can be limited to one grade lower than the thermal class of the insulation used. e.g. F/B = Winding thermal class F (155°C), utilized according to B (130°C)

TECO AESV, AESU, AERV and AEQV motors have insulation class (thermal class) F and are equipped with one PTC 150 at the hot spot of each phase of the winding (3 in total).

10 Maintenance

10.1 Visual inspection

Maintain and service the equipment at regular intervals according to its usage and insure the

- equipment is clean, free of dust with clear air flow
- equipment has no unusual vibration and/or noise
- fixings and fasteners are not getting loose or corroded
- electrical connections are tight and not corroded
- earthing connections are functioning
- shaft seals and terminal box gaskets are in position and not significantly frayed
- paint finish is in good conditions, de-rust and repaint if necessary to avoid excessive corrosion
- shaft couplings are firmly fixed and shaft alignment is correct
- there is no liquid or moisture inside the motor or terminal box caused by condensation

10.2 Lubrication

Larger frames (usually frame size 180 and above) are equipped with grease nipples. These motors are already greased during manufacture. The standard grease model is **ESSO UNIREX N3 and the alternative grease is SHELL ALVANIA RL3.**

The 1st operation must be referred to 2.6.6. Furthermore, make sure **the quantity of lubricant recommended by lubricant interval sticker**

The grease must be replaced at regular intervals with the same quality and amount as indicated on the additional regreasing nameplates at the motor. The re-greasing intervals depend on the motor size and its usage. Use the table in 7.1.5 as a guideline for relubrication intervals based on different usage.

Attention:

- For re-greasing use only the grease specified on the re-greasing nameplate (other grease manufacturers may have grease which can be mixed with the one specified. In those cases please refer to the grease specification of the grease manufacturer for clarification)
- Grease nipples must be clean to avoid dirt penetrating the bearings during re-greasing
- Grease relief openings must be open and have free access so that used grease can escape unhindered
- It is preferable to re-grease the bearings during operation for better grease distribution. Make sure that this work is done by trained personnel only and live and moving parts are safely covered.
- If this is impossible (i.e. danger from rotating parts) re-grease when stationary. In this case use only half of the grease amount specified on the re-greasing nameplate. Restart the equipment for at least one minute of operation. Shut down again and re-grease with the remaining half of the grease amount specified. Restart for operation
- Too excessive or too frequent lubrication may damage the motor!
- Once bearing failure or vibration is detected the alignment must be checked!

Motors frame size 160 and below are equipped with double shielded bearings (suffix “zz” on bearing type). Those motors bearings are lubricated for life and cannot be re-greased.

Standard bearings used in TECO low voltage motors:

Cast Iron Motors: Type AESV, AESU

Frame Size	Poles	Drive End				Non Drive End	
		Sealed	Regreasable			Sealed	Regreasable
		Standard	Standard	Standard	Reinforced	Standard	Standard
		All-mountings	B-mountings	V-mountings	All mountings	All-mountings	All-mountings
80	2	6204 ZZC3	nA	nA	nA	6204 ZZC3	nA
	4	6204 ZZC3				6204 ZZC3	
	6, 8	6204 ZZC3				6204 ZZC3	
90	2	6205 ZZC3				6205 ZZC3	
	4	6205 ZZC3				6205 ZZC3	
	6, 8	6205 ZZC3				6205 ZZC3	
100	2	6206 ZZC3				6206 ZZC3	
	4	6206 ZZC3				6206 ZZC3	
	6, 8	6206 ZZC3				6206 ZZC3	
112	2	6306 ZZC3				6306 ZZC3	
	4	6306 ZZC3				6306 ZZC3	
	6, 8	6306 ZZC3				6306 ZZC3	
132	2	6308 ZZC3				6306 ZZC3	
	4	6308 ZZC3				6306 ZZC3	
	6, 8	6308 ZZC3				6306 ZZC3	
160	2	6309 ZZC3				6307 ZZC3	
	4	6309 ZZC3				6307 ZZC3	
	6, 8	6309 ZZC3				6307 ZZC3	

Note: nA (Not Available)

TECO distributed by MOTOVARIO® HEART OF MOTION a TECO Group company

Cast Iron Motors: Type AESV, AESU

Frame Size	Poles	Drive End				Non Drive End		
		Sealed	Regreasable			Sealed	Regreasable	Regreasable
		Standard	Standard	Standard	Reinforced	Standard	Standard	Standard
		All-mountings	B-mountings	V-mountings	All-mountings	All-mountings	All-mountings	V-mountings
180	2	nA	6311C3	6311C3	NU311	nA	6310C3	6310C3
	4		6311C3	6311C3	NU311		6310C3	6310C3
	6, 8		6311C3	6311C3	NU311		6310C3	6310C3
200	2		6312 C3	6312 C3	NU312		6212 C3	6212 C3
	4		6312 C3	6312 C3	NU312		6212 C3	6212 C3
	6, 8		6312 C3	6312 C3	NU312		6212 C3	6212 C3
225	2		6312 C3	6312 C3	NU312		6212 C3	6212 C3
	4		6313 C3	6313 C3	NU313		6213 C3	6213 C3
	6, 8		6313 C3	6313 C3	NU313		6213 C3	6213 C3
250	2		6313 C3	6313 C3	NU313		6313 C3	6313 C3
	4		6315 C3	6315 C3	NU315		6313 C3	6313 C3
	6, 8		6315 C3	6315 C3	NU315		6313 C3	6313 C3
280	2		6316 C3	6316 C3	nA		6314 C3	6314 C3
	4		6318 C3	6318 C3	NU318		6316 C3	6316 C3
	6, 8		6318 C3	6318 C3	NU318		6316 C3	6316 C3
315	2		6316 C3	6316 C3	nA		6314 C3	7314 B
	4		6320 C3	6320 C3	NU320		6316 C3	6316 C3
	6, 8		6320 C3	6320 C3	NU320		6316 C3	6316 C3
315D	2		6316 C3	6316 C3	nA		6316 C3	7316 B
	4		6322 C3	6322 C3	NU322		6322 C3	6322 C3
	6, 8		6322 C3	6322 C3	NU322		6322 C3	6322 C3
355	2		6318 C3	6318 C3	nA		6318 C3	7318 B
	4		6322 C3	6322 C3	NU322		6322 C3	7322 B
	6, 8		6322 C3	6322 C3	NU322		6322 C3	7322 B

Note: nA (Not Available)

11 Repair

Use only professionals for motor repair!
Use only TECO authorized professionals for motor repair during warranty period to avoid invalidating the warranty

12 Disposal

TECO motors consist primarily of cast iron, steel, copper and aluminium alloy.

Some plastic, varnish and rubber material is used (i.e. insulation, sealing, terminal board, impregnation, fan, fan cover, nameplate).

The metal contents are recyclable by separating from each other.

To recycle the copper from winding it is recommended to burn them off in a furnace to separate copper from varnish and insulation material.

The furnace may need a license to ensure the gases released during burning process do not pollute.

Dispose only in accordance to the local laws and regulations by using authorized recycling company

13 Spare parts

In order to allow TECO to provide spare parts the motor serial number (printed on the motor nameplate) shall be identified along with the spare part number.

APPENDIX-1

Baugröße/ Frame Size/ Hauteur d'Arbre/ Grandezza Motore/ Carcasa/ Размер двигателя 160	Polzahl Poles Poles Poli Polos полюсов	Lagergröße Bearing Size Type de Roulement Grandezza Cuscinetti Tamaño Rodamiento Размер подшипника		Nachschmierfrist [h] Lubrication Interval [h] Intervalle de Lubrification [h] Intervallo Lubrificazione [h] Intervalo Lubricación [h] Периодичность замены смазки в подшипниках [ч]		Fettmenge [g] Grease Quantity [g] Quantité de Graisse [g] Quantità di Grasso [g] Cantidad de Grasa [g] Количество смазки [г]	
	Standard	DE	NDE	DE	NDE	DE	NDE
	2	6309 C3	6307 C3	3500	4200	25	13
	4	6309 C3	6307 C3	8500	10500	25	13
	6	6309 C3	6307 C3	14000	16000	25	13
	8	6309 C3	6307 C3	17500	21000	25	13
	Verstärkt/ Reinforced/ Renforcé/ Rinforzati/ Reforzado/ Усиленный						
	4	NU309C3	6307 C3	3300	10500	25	13
	6	NU309C3	6307 C3	5100	16000	25	13
	8	NU309C3	6307 C3	7100	21000	25	13
	DE = Antriebsseitig/ Drive End/ Coté Arbre/ Anteriore/ Lado Acoplamiento/ Приводная сторона двигателя						
	NDE = Lüfterseitig/ Non Drive End/ Coté Opposé à l'Arbre/ Posteriore/ Lado Op. Acoplamiento/ Неприводная сторона двигателя						

32045A0100005

TECO distributed by MOTOVARIO HEART OF MOTION a TECO Group company

Baugröße/ Frame Size/ Hauteur d'Arbre/ Grandezza Motore/ Carcasa/ Размер двигателя	Polzahl Poles Poles Poli Polos полюсов	Lagergröße Bearing Size Type de Roulement Grandezza Cuscinetti Tamaño Rodamiento Размер подшипника		Nachschmierfrist [h] Lubrication Interval [h] Intervalle de Lubrification [h] Intervallo Lubrificazione [h] Intervalo Lubricación [h] Периодичность замены смазки в подшипниках [ч]		Fettmenge [g] Grease Quantity [g] Quantité de Graisse [g] Quantità di Grasso [g] Cantidad de Grasa [g] Количество смазки [г]	
180	Standard	DE	NDE	DE	NDE	DE	NDE
	2	6311 C3	6310 C3	2600	3100	40	30
	4	6311 C3	6310 C3	7000	8000	40	30
	6	6311 C3	6310 C3	10500	12000	40	30
	8	6311 C3	6310 C3	14500	17000	40	30
	Verstärkt/ Reinforced/ Renforcé/ Rinforzati/ Reforzado/ Усиленный						
	4	NU311C3	6310 C3	3200	8000	40	30
	6	NU311C3	6310 C3	5000	12000	40	30
	8	NU311C3	6310 C3	7000	17000	40	30
	DE = Antriebsseitig/ Drive End/ Coté Arbre/ Anteriore/ Lado Acoplamiento/ Приводная сторона двигателя						
	NDE = Lüfterseitig/ Non Drive End/ Coté Opposé à l'Arbre/ Posteriore/ Lado Op. Acoplamiento/ Неприводная сторона двигателя						32045A0110001

Baugröße/ Frame Size/ Hauteur d'Arbre/ Grandezza Motore/ Carcasa/ Размер двигателя	Polzahl Poles Poles Poli Polos полюсов	Lagergröße Bearing Size Type de Roulement Grandezza Cuscinetti Tamaño Rodamiento Размер подшипника		Nachschmierfrist [h] Lubrication Interval [h] Intervalle de Lubrification [h] Intervallo Lubrificazione [h] Intervalo Lubricación [h] Периодичность замены смазки в подшипниках [ч]		Fettmenge [g] Grease Quantity [g] Quantité de Graisse [g] Quantità di Grasso [g] Cantidad de Grasa [g] Количество смазки [г]	
200	Standard	DE	NDE	DE	NDE	DE	NDE
	2	6312 C3	6312 C3	2400	2700	50	50
	4	6312 C3	6312 C3	6700	7500	50	50
	6	6312 C3	6312 C3	10000	11500	50	50
	8	6312 C3	6312 C3	14000	16000	50	50
	Verstärkt/ Reinforced/ Renforcé/ Rinforzati/ Reforzado/ Усиленный						
	4	NU312C3	6312 C3	3100	7500	50	50
	6	NU312C3	6312 C3	4800	11500	50	50
	8	NU312C3	6312 C3	6800	16000	50	50
	DE = Antriebsseitig/ Drive End/ Coté Arbre/ Anteriore/ Lado Acoplamiento/ Приводная сторона двигателя						
	NDE = Lüfterseitig/ Non Drive End/ Coté Opposé à l'Arbre/ Posteriore/ Lado Op. Acoplamiento/ Неприводная сторона двигателя						32045A0120006

Baugröße/ Frame Size/ Hauteur d'Arbre/ Grandezza Motore/ Carcasa/ Размер двигателя	Polzahl Poles Poles Poli Polos полюсов	Lagergröße Bearing Size Type de Roulement Grandezza Cuscinetti Tamaño Rodamiento Размер подшипника		Nachschmierfrist [h] Lubrication Interval [h] Intervalle de Lubrification [h] Intervallo Lubrificazione [h] Intervalo Lubricación [h] Периодичность замены смазки в подшипниках [ч]		Fettmenge [g] Grease Quantity [g] Quantité de Graisse [g] Quantità di Grasso [g] Cantidad de Grasa [g] Количество смазки [г]	
225	Standard	DE	NDE	DE	NDE	DE	NDE
	2	6312 C3	6212 C3	2400	2700	65	30
	4	6313 C3	6213 C3	6000	7000	65	30
	6	6313 C3	6213 C3	9000	11000	65	30
	8	6313 C3	6213 C3	13000	15000	65	30
	Verstärkt/ Reinforced/ Renforcé/ Rinforzati/ Reforzado/ Усиленный						
	4	NU313C3	6213 C3	2700	7000	65	30
	6	NU313C3	6213 C3	4300	11000	65	30
	8	NU313C3	6213 C3	6500	15000	65	30
	DE = Antriebsseitig/ Drive End/ Coté Arbre/ Anteriore/ Lado Acoplamiento/ Приводная сторона двигателя						
	NDE = Lüfterseitig/ Non Drive End/ Coté Opposé à l'Arbre/ Posteriore/ Lado Op. Acoplamiento/ Неприводная сторона двигателя						32045A0130001

Baugröße/ Frame Size/ Hauteur d'Arbre/ Grandezza Motore/ Carcasa/ Размер двигателя	Polzahl Poles Poles Poli Polos полюсов	Lagergröße Bearing Size Type de Roulement Grandezza Cuscinetti Tamaño Rodamiento Размер подшипника		Nachschmierfrist [h] Lubrication Interval [h] Intervalle de Lubrification [h] Intervallo Lubrificazione [h] Intervalo Lubricación [h] Периодичность замены смазки в подшипниках [ч]		Fettmenge [g] Grease Quantity [g] Quantité de Graisse [g] Quantità di Grasso [g] Cantidad de Grasa [g] Количество смазки [г]	
250	Standard	DE	NDE	DE	NDE	DE	NDE
	2	6313 C3	6313 C3	2200	2200	90	65
	4	6315 C3	6313 C3	4800	6000	90	65
	6	6315 C3	6313 C3	8000	9000	90	65
	8	6315 C3	6313 C3	11000	13000	90	65
	Verstärkt/ Reinforced/ Renforcé/ Rinforzati/ Reforzado/ Усиленный						
	4	NU315C3	6313 C3	2200	6000	90	65
	6	NU315C3	6313 C3	3800	9000	90	65
	8	NU315C3	6313 C3	6000	13000	90	65
	DE = Antriebsseitig/ Drive End/ Coté Arbre/ Anteriore/ Lado Acoplamiento/ Приводная сторона двигателя						
	NDE = Lüfterseitig/ Non Drive End/ Coté Opposé à l'Arbre/ Posteriore/ Lado Op. Acoplamiento/ Неприводная сторона двигателя						32045A0140007

TECO distributed by MOTOVARIO HEART OF MOTION a TECO Group company

Baugröße/ Frame Size/ Hauteur d'Arbre/ Grandezza Motore/ Carcasa/ Размер двигателя 280	Polzahl Poles Poles Poli Polos полюсов	Lagergröße Bearing Size Type de Roulement Grandezza Cuscinetti Tamaño Rodamiento Размер подшипника		Nachschmierfrist [h] Lubrication Interval [h] Intervalle de Lubrification [h] Intervallo Lubrificazione [h] Intervalo Lubricación [h] Периодичность замены сма зки в подшипниках [ч]		Fettmenge [g] Grease Quantity [g] Quantité de Graisse [g] Quantità di Grasso [g] Cantidad de Grasa [g] Количество смазки [г]	
	Standard	DE	NDE	DE	NDE	DE	NDE
	2	6316 C3	6314 C3	1400	1800	100	80
	4	6318 C3	6316 C3	3800	4200	120	100
	6	6318 C3	6316 C3	7000	7500	120	100
	8	6318 C3	6316 C3	9500	10000	120	100
	Verstärkt/ Reinforced/ Renforcé/ Rinforzati/ Reforzado/ Усиленный						
	4	NU 318	6316 C3	1800	4200	120	100
	6	NU 318	6316 C3	3100	7500	120	100
	8	NU 318	6316 C3	4200	10000	120	100
	DE = Antriebsseitig/ Drive End/ Coté Arbre/ Anteriore/ Lado Acoplamiento/ Приводная стор она двигателя						
	NDE = Lüfterseitig/ Non Drive End/ Coté Opposé à l'Arbre/ Posteriore/ Lado Op. Acoplamiento/ Неприводная сторона двигателя						3W045D3440001

Baugröße/ Frame Size/ Hauteur d'Arbre/ Grandezza Motore/ Carcasa/ Размер двигателя 315-S-M-L	Polzahl Poles Poles Poli Polos полюсов	Lagergröße Bearing Size Type de Roulement Grandezza Cuscinetti Tamaño Rodamiento Размер подшипника		Nachschmierfrist [h] Lubrication Interval [h] Intervalle de Lubrification [h] Intervallo Lubrificazione [h] Intervalo Lubricación [h] Периодичность замены сма зки в подшипниках [ч]		Fettmenge [g] Grease Quantity [g] Quantité de Graisse [g] Quantità di Grasso [g] Cantidad de Grasa [g] Количество смазки [г]	
	Standard	DE	NDE	DE	NDE	DE	NDE
	2	63(73)16 C3	6314 C3	1400	1800	100	80
	4	6320 C3	6316 C3	3600	4200	160	100
	6	6320 C3	6316 C3	6000	7500	160	100
	8	6320 C3	6316 C3	8500	10000	160	100
	Verstärkt/ Reinforced/ Renforcé/ Rinforzati/ Reforzado/ Усиленный						
	4	NU 320	6316 C3	1600	4200	160	100
	6	NU 320	6316 C3	2700	7500	160	100
	8	NU 320	6316 C3	3700	10000	160	100
	DE = Antriebsseitig/ Drive End/ Coté Arbre/ Anteriore/ Lado Acoplamiento/ Приводная стор она двигателя						
	NDE = Lüfterseitig/ Non Drive End/ Coté Opposé à l'Arbre/ Posteriore/ Lado Op. Acoplamiento/ Неприводная сторона двигателя						3W045D3450006

Baugröße/ Frame Size/ Hauteur d'Arbre/ Grandezza Motore/ Carcasa/ Размер двигателя 315D	Polzahl Poles Poles Poli Polos полюсов	Lagergröße Bearing Size Type de Roulement Grandezza Cuscinetti Tamaño Rodamiento Размер подшипника		Nachschmierfrist [h] Lubrication Interval [h] Intervalle de Lubrification [h] Intervallo Lubrificazione [h] Intervalo Lubricación [h] Периодичность замены смазки в подшипниках [ч]		Fettmenge [g] Grease Quantity [g] Quantité de Graisse [g] Quantità di Grasso [g] Cantidad de Grasa [g] Количество смазки [г]	
	Standard	DE	NDE	DE	NDE	DE	NDE
	2	63(73)16 C3	6316 C3	1400	1400	100	100
	4	6322 C3	6322 C3	2750	2750	220	220
	6	6322 C3	6322 C3	5000	5000	220	220
	8	6322 C3	6322 C3	8000	8000	220	220
	Verstärkt/ Reinforced/ Renforcé/ Rinforzati/ Reforzado/ Усиленный						
	4	NU 322	6322 C3	1300	2750	220	220
	6	NU 322	6322 C3	2300	5000	220	220
	8	NU 322	6322 C3	3500	8000	220	220
	DE = Antriebsseitig/ Drive End/ Coté Arbre/ Anteriore/ Lado Acoplamiento/ Приводная сторона двигателя						
	NDE = Lüfterseitig/ Non Drive End/ Coté Opposé à l'Arbre/ Posteriore/ Lado Op. Acoplamiento/ Неприводная сторона двигателя 3W045D3460001						

Baugröße/ Frame Size/ Hauteur d'Arbre/ Grandezza Motore/ Carcasa/ Размер двигателя 355C	Polzahl Poles Poles Poli Polos полюсов	Lagergröße Bearing Size Type de Roulement Grandezza Cuscinetti Tamaño Rodamiento Размер подшипника		Nachschmierfrist [h] Lubrication Interval [h] Intervalle de Lubrification [h] Intervallo Lubrificazione [h] Intervalo Lubricación [h] Периодичность замены смазки в подшипниках [ч]		Fettmenge [g] Grease Quantity [g] Quantité de Graisse [g] Quantità di Grasso [g] Cantidad de Grasa [g] Количество смазки [г]	
	Standard	DE	NDE	DE	NDE	DE	NDE
	2	63(73)18 C3	6318 C3	1100	1100	120	120
	4	6322 C3	6322 C3	2750	2750	220	220
	6	6322 C3	6322 C3	5000	5000	220	220
	8	6322 C3	6322 C3	8000	8000	220	220
	Verstärkt/ Reinforced/ Renforcé/ Rinforzati/ Reforzado/ Усиленный						
	4	NU 322	6322 C3	1300	2750	220	220
	6	NU 322	6322 C3	2300	5000	220	220
	8	NU 322	6322 C3	3500	8000	220	220
	DE = Antriebsseitig/ Drive End/ Coté Arbre/ Anteriore/ Lado Acoplamiento/ Приводная сторона двигателя						
	NDE = Lüfterseitig/ Non Drive End/ Coté Opposé à l'Arbre/ Posteriore/ Lado Op. Acoplamiento/ Неприводная сторона двигателя 3W045D6380009						

TECO distributed by MOTOVARIO® HEART OF MOTION a TECO Group company

MOTOVARIO S.p.A.
Via Quattro Passi 1/3
41043 Formigine (MO)
Italy

MOTOVARIO GMBH
Pfützenstr. 75
64347 Griesheim
Germany

MOTOVARIO LTD
Rushock Trading Estate
WR9 0NR Droitwich,
Worcestershire
United Kingdom

MOTOVARIO GEAR SOLUTIONS PRIVATE LIMITED
C.S. Plot No.512,
Mouza Hanspukuria
Diamond Harbour Road
700104 - Thakurpukur, Joka (Kolkata)
India

MOTOVARIO SAS
42, Rue de l'Avenir
69740 Genas
France

MOTOVARIO S.A.U.
Pol. Industrial Camì del Plà
C/Costa del Plà, n.3
08297 Castellgalì
Spain

MOTOVARIO CORPORATION
1440 Bluegrass Lakes Parkway
30004 - Alpharetta (GA)
USA

MOTOVARIO INTERNATIONAL TRADING (Shanghai) Co. Ltd
Xikang Road No.1018
Floor 16 Room 1607
200060 - (Putuo Shanghai)
China

TECO

distributed by

MOTOVARIO®
HEART OF MOTION
a TECO Group company